SECU-3T Engine Control Unit (RS-232 version)
Designed by Alexey A. Shabelnikov (aka STC), UA, Kiev.
Copyright (C) 2007-2013 Alexey A. Shabelnikov
http://secu-3.org, e-mail: shabelnikov@secu-3.org.
Revision 17
20/10/2013

Licensed under the TAPR Open Hardware License (www.tapr.org/OHL) with one exception:
This work can not be used in commercial purposes without approval of author.

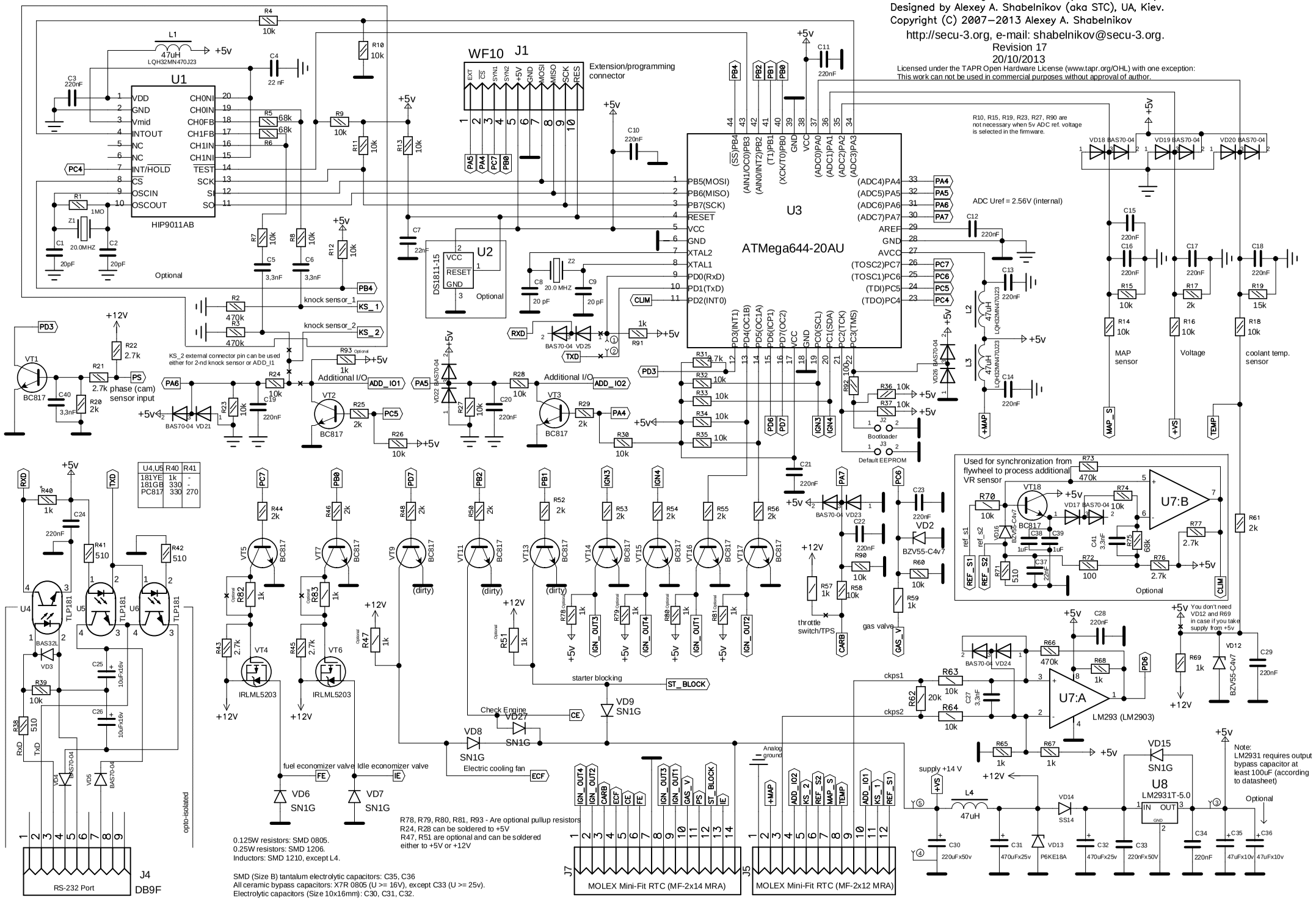

U4,U5	R40	R41
181YE	1k	-
181GB	330	-
PC817	330	270